Поставщик систем безопасности TELECAMERA.RU

YLI ELECTRONIC

Remote Control for Access Control & Parking

Model: WBK-400-2-12

Specification

- Size : 60Lx42Wx28H(mm)
- Input:12VDC (24VDC need order)
- Current: ⩽12mA
- Aptional Accessories: WBK-400A
- Weight: 0.09kg
- Up to 29 Remote control
- Transmitting Distance: 50m(in the open area)
- Finished for Shell: Plastic, Abrasion Resistant
- Contact Output: NO\NC\COM
- Transmitting Freq:433.92MHZ

Wiring Diagram

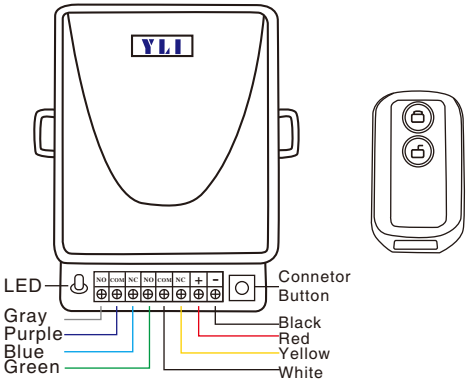

DAP Options

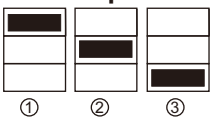
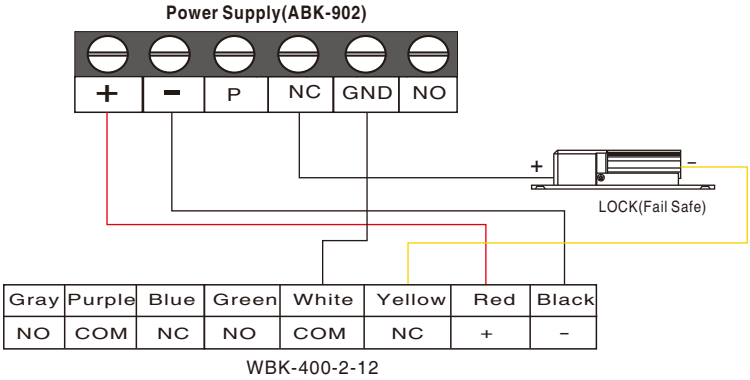
① Use First Key Only
② First Key Open Second Key Lock
③ Use First Key Only 3sec Timer